Ball Sector Valve 4040

SCHUBERT SALZER

1“ up to 12“

Pneumatic control valve for the control of neutral and aggressive fluids with integrated positioner

- 1“ up to 12“
- High Cv-values up to 4454
- Excellent control characteristics
- Suitable for abrasive media
- Easily exchangeable seat ring
- Low maintenance
- Actuators can be easily fitted
- Efficient and easy to install
- Optional volume booster Type 4090 (from 6“) in order to reduce the repsonse time
- Optional with face to face dimension acc. ANSI ISA 75.08.02

Technical Information Valve

Design		1“ - 10“ flangeless wafertype 12“ flange connection
Nominal sizes		1“ up to 12“
Body material	cast parts turned parts	CF8M (1.4408) 316 L (1.4404)
Material of the bearing shaft		1.4122
Bearing material		high temperature plain bearing
Connection to the actuator		mounting kit DIN/ISO 5211
Nominal pressure	1“ - 2“ 2 1/2“ - 4“ 5“ - 12“	ANSI150, ANSI300, 580 psi (for flanges 145 psi - 580 psi) ANSI150, ANSI300, 365 psi (for flanges 145 psi - 365 psi) ANSI150, 235 psi (for flanges 145 psi - 235 psi)
Fluid Temperature		-40°F up to +428°F depending on the sealings
Ambient temperature		-4°F up to +176°F special version on request depending on the sealings
Vacuum		up to 1,48 mercury (Hg)
Characteristic		almost equal percentage
Rangeability		300:1
Spezific leckage rate shaft and body sealing		series KS2, DN25-DN250: ISO FE-BH-CC3-SSA0-t(-40°C/+220°C)-PN40-ISO 15848-1 series KS1, DN300: ISO FE-BH-CC-SSA0-t(RT)-PN16-ISO 15848-1

Schubert & Salzer Inc., 4601 Corporate Drive N.W., Suite 100 Concord, NC 28027, Ph.: (704) 789 0169, Fax: (704) 792 9783
info@schubertsalzerinc.com, www.schubertsalzerinc.com

Ball Sector Valve 4040

SCHUBERT SALZER

Working pressure max.

Nominal size	maximum differential pressure (delta p)									
	seat ring PTFE			seat ring PEEK				seat ring Stellit		
	up to 176°F psi	248°F psi	338°F psi	up to 176°F psi	248°F psi	338°F psi	428°F psi	up to 176°F psi	338°F psi	428°F psi
1“ - 2“	365	230	85	580	580	365	230	580	580	365
2 1/2“ - 4“	230	175	75	365	365	230	145	365	365	230
5“ - 12“	230	175	60	230	230	175	115	230	230	175

Actuators for mounting according DIN/ISO5211, pilot pressure 5 - 6 bar
(for less than 5 bar pilot pressure, please inform us)

Temperature limits

Seatring	Sealing seatring									
	Viton		EPDM		NBR		FFKM		PFA-Silicone	
	Tmin [°F]	Tmax [°F]	Tmin [°F]	Tmax [°F]	Tmin [°F]	Tmax [°F]	Tmin [°F]	Tmax [°F]	Tmin [°F]	Tmax [°F]
PTFE	5	338	-40	284	-22	212	5	338	-49	338
PEEK	5	392	-40	284	-22	212	5	428	-49	428
Stellit	5	392	-40	284	-22	212	5	428	-49	428

Leakage

Seat ring	Ball sector	Leakage	
		Amount of the max. Kvs-value	class acc. EN 60534-4: (IEC 60534-4)
PTFE or PEEK	stainless steel polished		VI
PTFE or PEEK	stainless steel hard chrome plated	5x10-7	IV-S1
Stellit	stainless steel, hard chrome plated + lapped	5x10-6	IV-S1

Operating time with positioner 8049

Size	manipulating time opening 5% to 95%			manipulating time closing 5% to 95%		
	Standard	with volume booster Type 4090	with external solenoid valves (1500NL)	Standard	with volume booster Type 4090	with external solenoid valves (1500NL)
4“	4 s	1.9 s	1 s	5.4 s	3 s	1.2 s
6“	7 s	2.5 s	1.5 s	8.5 s	4 s	1.6 s
8“	11 s	4 s	1.8 s	13 s	8 s	1.9 s
10“	14 s	5 s	2.5 s	17.5 s	10 s	2.6 s
12“	23 s	9 s	4.5 s	43 s	18 s	6 s

Cvs-Values

Size	Cvs-value reduced to					
	100%	63%	40%	25%	16%	6,3%
1“	29	14.7	9.2	6.2	4.2	1.7
1 1/2“	80.9	46.6	29			
2“	126	75.4	47.6			
2 1/2“	220.4					
3“	347					
4“	451					
5“	874					
6“	936					
8“	1578					
10“	2567					
12“	4439					

Ball Sector Valve 4040

SCHUBERT SALZER

Torques and mounting kits

for retrofitting actuators

Size	rotation angle nominal	max. press. nominal PN	max. press. nominal ANSI	req. torque [lbf ft]		mounting kit ISO 5211 diagonal square shaft	
				on/off-operation	control operation	series 1	series 2
1“	90°	PN40	ANSI 300	11	18	F04/SW11	F05/SW14
1 1/2 „	90°	PN40	ANSI 300	22	37	F05/SW14	F07/SW17
2“	90°	PN40	ANSI 300	22	37	F05/SW14	F07/SW17
2 1/2“	90°	PN25	ANSI 300	44	74	F07/SW17	F10/SW22
3“	90°	PN25	ANSI 300	44	74	F07/SW17	F10/SW22
4“	90°	PN25	ANSI 300	66	111	F07/SW17	F10/SW22
5“	90°	PN16	ANSI 150	111	184	F10/SW22	F12/SW27
6“	90°	PN16	ANSI 150	111	184	F10/SW22	F12/SW27
8“	90°	PN16	ANSI 150	155	258	F12/SW27	F14/SW36
10“	90°	PN16	ANSI 150	266	443	F12/SW27	F14/SW36
12“	90°	PN16	ANSI 150	664	1106	F14/SW36	F16/SW46

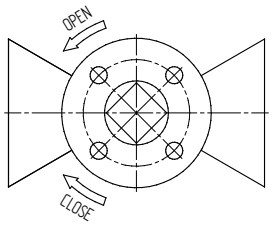

Ball Sector Valve with reduced Kvs-values

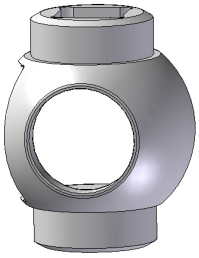

100%

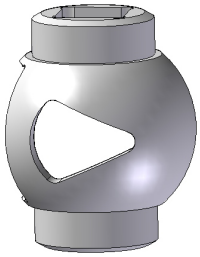

reduced to 63%

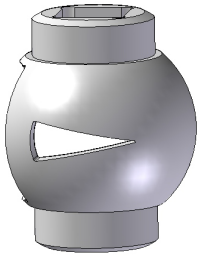

reduced to 25%

Ball Sector Valve Type 4040 with hand wheel gear box

Ball Sector Valve 4040

SCHUBERT SALZER

Ordering Number System

Ordering Number:

4040/									M					Z	...

Nominal Size

e.g. 1“ = 025	xxx

Article

valve	V
repair-kit	R
seat kit	D

Connection

KS2-flangeless design according DIN EN 1092-1	3
KS2-flangeless design according ASME B 16.5, ANSI 150	H
KS2-flangeless design according ASME B 16.5, ANSI 300	I
KS1-flangeless design according DIN EN 1092-1	1
KS1-flangeless design according ASME B 16.5, ANSI 150	E

Body material

stainless steel 1.4408 (CF8M) / 1.4404	1

Material combination

seat ring: PTFE; ball sector: 1.4408, polished	1
seat ring: PTFE; ball sector: 1.4408, hard chrome plated	A
seat ring: Stellite; ball sector: 1.4408, hard chrome plated and lapped	B
seat ring: TECAPEEK; ball sector: 1.4408, hard chrome plated	P

Seal combination

all seals (part 13-16) from VITON, medium temperature: +5°F up to +392°F	1
all seals (part 13-16) from FFKM (Perlast/Kalrez), medium temperature: +5°F up to +428°F	A
all seals (part 13-16) from EPDM, medium temperature: -22°F up to +284°F	D
all seals (part 13-16) from NBR(P700), medium temperature: -40°F up to +212°F	N
Packing made of PTFE; O-Ring (Teil 115) made of VITON, fluid temperature: +5°F up to +392°F	3
Packing made of PTFE; O-Ring (Teil 115) made of EPDM, fluid temperature: -40°F up to +284°F	4
Packing made of PTFE; O-Ring (Teil 115) made of FFKM, fluid temperature: +5°F up to +428°F	5
Packing made of PTFE; O-Ring (Teil 115) made of NBR, fluid temperature: -22°F up to +212°F	6
Packing made of PTFE, O-Ring (part 15) made of PFA-silicone, fluid temperature: -45°C to +220°C	

Actuator

without mounting kit, without actuator, connection to bearing pin: feather key	0
without mounting kit, without actuator, connection to bearing pin: square shaft	V
without mounting kit, without actuator, connection to bearing pin: dihedron	Z
without actuator, with standard mounting kit according DIN/ISO 5211 (Series 1)	1
without actuator, with standard mounting kit according DIN/ISO 5211 (Series 2)	2
pneumatic quater-turn actuator (Air Torque) with mounting kit according DIN/ISO 5211	T
hand lever	H
with hand wheel gear box and with mounting kit acc. DIN/ISO 5211	K

Safety position:

without	0
single acting, spring to close	1
double acting, without safety position	2
single acting, spring to open	3

Mounting

standard	-
NPT-thread	N

Positioner

without	-
without positoner, with mounting kit according VDI/VDE 3845 for positioners	0
digital positioner Schubert & Salzer Type 8049, 4-wire	L
digital positioner Schubert & Salzer Type 8049, 2-wire	R
digital positioner Schubert & Salzer Type 8049-ExPro, II 2G Ex ia IIC T4 Gb, IP 65	E
digital positioner type 8049 ExPro-FM with base plate in stainless steel; Ta = +14°F to +167°F; IS Class I Division 1, Groups A, B, C, D; T4 Entity; Class I Zone 0 AEx ia IIC T4 Entity, IP65	K
digital positioner type 8049 ExPro-FM with base plate in stainless steel; Ta = +14°F to +167°F; NI Class I Division 2, Groups A, B, C, D; T4 NIFW, IP65	Y

Additional specifications for the positioner

without	-
positioner single acting	1
positioner double acting	2
positioner single acting with gauge	3
positioner double acting with gauge	4

Positioner settings

standard	-
double acting 20 - 4 mA (20mA closed, 4mA open)	1
single acting 20 - 4 mA (inverse function, safety position at 20mA)	2

Cvs-value

100%	-
63%	A
40%	K

Ball Sector Valve 4040

SCHUBERT SALZER

Dimensions KS2 with actuator and positioner 8049

Sealing of the bearing shaft with PTFE-packing

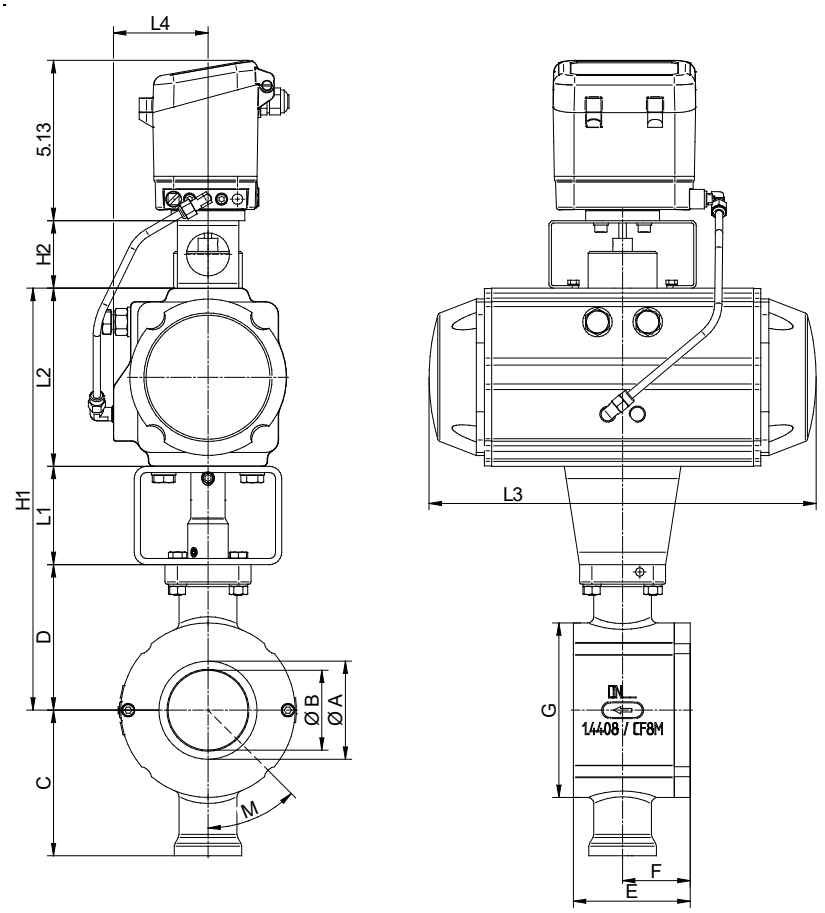

Size	actuator single acting						actuator double acting					
	L1	L2	L3	L4	H1	weight [lbs]	L1	L2	L3	L4	H1	weight [lbs]
1''	2.36	4.02	8.29	2.05	9.72	14	2.36	3.35	6.24	1.85	9.06	9.5
1 1/2''	2.36	4.53	9.74	2.24	10.51	18	2.36	4.02	8.29	2.05	10	14.8
2''	2.36	4.53	9.74	2.24	10.63	20	2.36	4.02	8.29	2.05	10.12	15.5
2 1/2''	3.15	5.71	12.4	3.03	13.41	37	2.36	4.53	9.74	2.12	11.44	25
3''	3.15	5.71	12.4	3.03	13.52	38	2.36	4.53	9.74	2.12	11.56	26.7
4''	3.15	6.18	13.58	3.23	14.43	53	2.36	5	10.57	2.64	12.46	38
5''	3.15	6.97	16.08	3.6	17.11	83	3.15	6.18	13.58	3.23	16.32	57.8
6''	3.15	6.97	16.08	3.6	17.48	90	3.15	6.18	13.58	3.23	16.69	75
8''	3.15	8.68	19.17	4.13	20.33	159	3.15	6.97	16.08	37.85	18.62	121.7
10''	3.15	9.65	21.38	4.41	22.32	240	3.15	7.72	17.22	3.9	20.39	187

Size	A	B	C	D	E	F	G	H2
1''	0.98	0.79	3.35	3.35	1.97	1.02	2.95	1.77
1 1/2''	1.61	1.26	3.62	3.62	2.28	1.22	3.78	1.77
2''	2.09	1.57	3.74	3.74	2.8	1.5	4.41	1.77
2 1/2''	2.56	1.97	4.55	4.55	3.35	1.93	5.08	2.17
3''	3.15	2.56	4.67	4.67	3.74	2.17	5.59	2.17
4''	3.94	3.15	5.1	5.1	4.41	2.44	6.85	2.17
5''	3.94	4.92	6.99	6.99	5.83	3.35	7.87	2.17
6''	5.91	4.72	7.36	7.36	6.69	3.74	8.66	2.17
8''	7.87	6.1	8.5	8.5	8.27	4.72	10.85	2.95
10''	9.84	7.68	9.53	9.53	10.63	5.71	13.31	2.95

Dimensions in inch

Ball Sector Valve 4040

SCHUBERT SALZER

Dimensions KS2 without actuator (with mounting kit ISO 5211)

Sealing of the bearing shaft with PTFE-packing

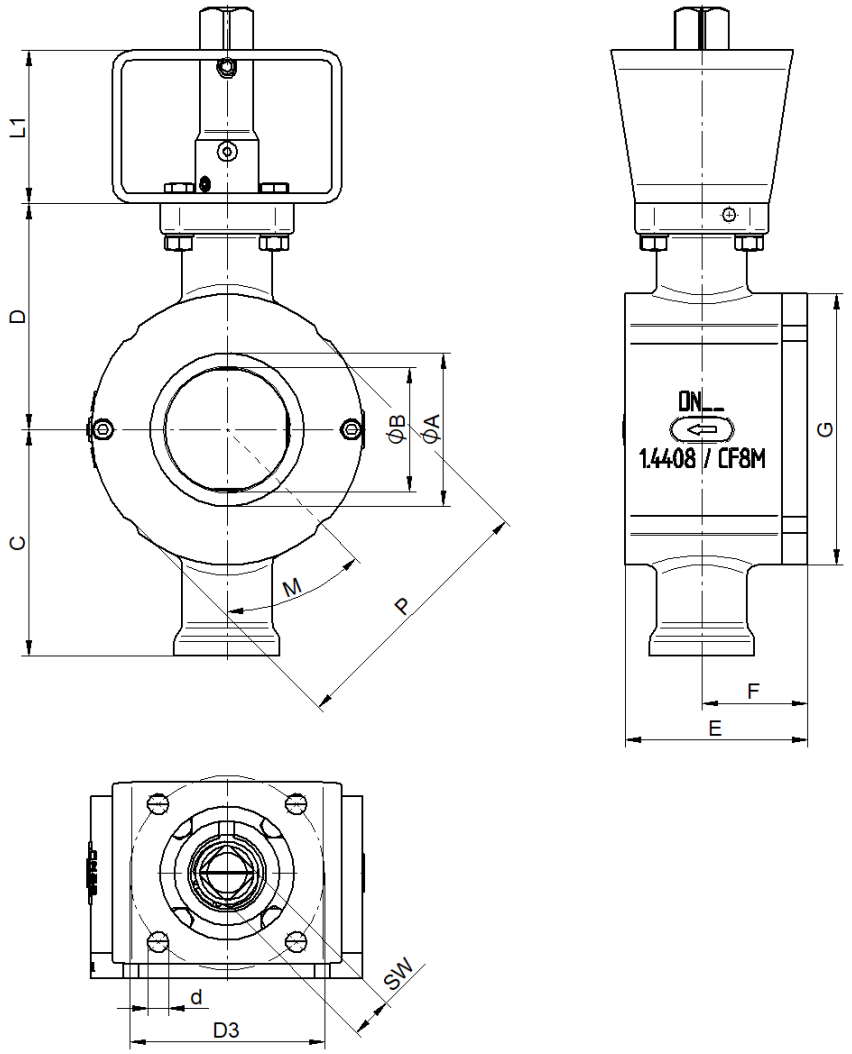

DN	A	B	C	D	E	F	G	series 1					series 2					weight [lbs]
								L1	SW	d	D3	DIN ISO 5211	L1	SW	d	D3	DIN ISO 5211	
1''	0.98	0.79	3.35	3.35	1.97	1.02	2.95	2.36	0.43	0.22	1.65	F 04	2.36	0.55	0.26	1.97	F 05	4.9
1 1/2''	1.61	1.26	3.62	3.62	2.28	1.22	3.78	2.36	0.55	0.26	1.97	F 05	2.36	0.67	0.35	2.76	F 07	6.6
2''	2.09	1.57	3.74	3.74	2.8	1.5	4.41	2.36	0.55	0.26	1.97	F 05	2.36	0.67	0.35	2.76	F 07	8.4
2 1/2''	2.56	1.97	4.55	4.55	3.35	1.93	5.08	2.36	0.67	0.35	2.76	F 07	3.15	0.87	0.43	4.02	F 10	14.1
3''	3.15	2.56	4.67	4.67	3.74	2.17	5.59	2.36	0.67	0.35	2.76	F 07	3.15	0.87	0.43	4.02	F 10	15.9
4''	3.94	3.15	5.1	5.1	4.41	2.44	6.85	2.36	0.67	0.35	2.76	F 07	3.15	0.87	0.43	4.02	F 10	24.3
5''	3.94	4.92	6.99	6.99	5.83	3.35	7.87	3.15	0.87	0.43	4.02	F 10	3.15	1.06	0.53	4.92	F 12	44.1
6''	5.91	4.72	7.36	7.36	6.69	3.74	8.66	3.15	0.87	0.43	4.02	F 10	3.15	1.06	0.53	4.92	F 12	50.7
8''	7.87	6.1	8.5	8.5	8.27	4.72	10.85	3.15	1.06	0.53	4.92	F 12	3.15	1.42	0.67	5.51	F 14	88.2
10''	9.84	7.68	9.53	9.53	10.63	5.71	13.31	3.15	1.06	0.53	4.92	F 12	3.15	1.42	0.67	5.51	F 14	145.5

Dimensions in inch

Ball Sector Valve 4040

SCHUBERT SALZER

Dimensions KS2 without actuator version with square shaft

Sealing of the bearing shaft with PTFE-packing

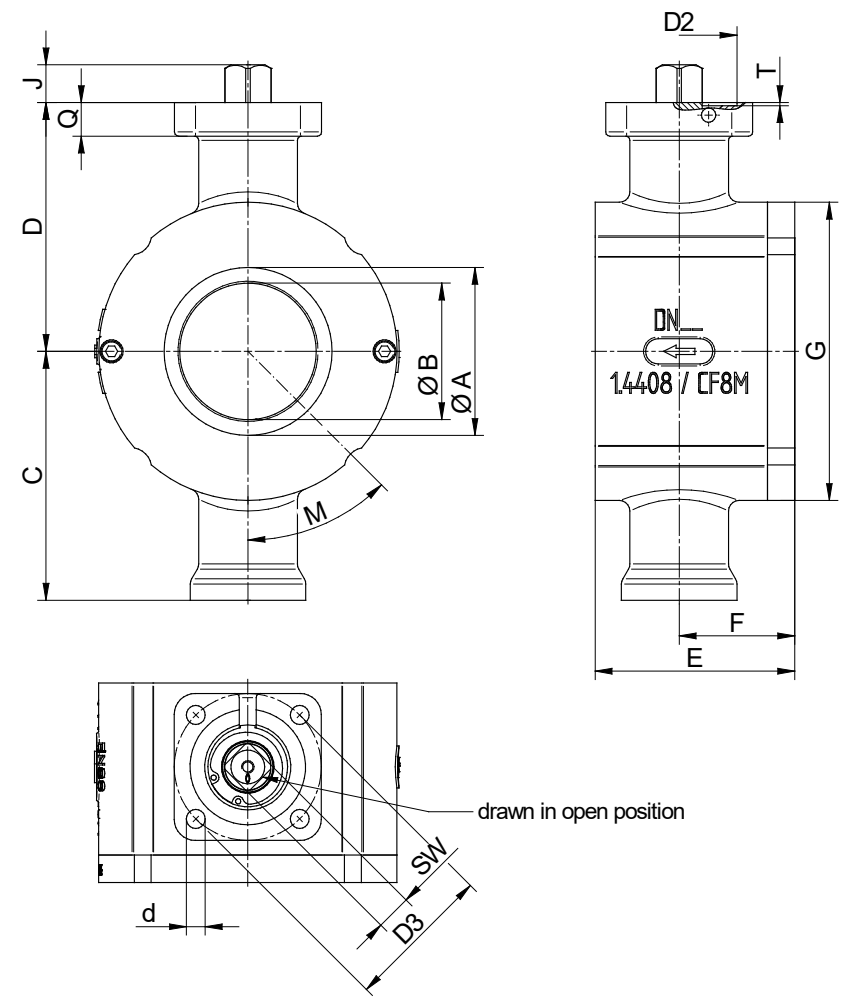

Size	A	B	C	D	E	F	J	SW	Q	d	D2	T	D3	DIN ISO 5211	Weight [lbs]
1''	0.98	0.79	3.35	3.35	1.97	1.02	0.59	0.55	0.43	0.26	1.38	0.04	1.97	F 05	4.9
1 1/2''	1.61	1.26	3.62	3.62	2.28	1.22	0.59	0.55	0.43	0.26	1.38	0.04	1.97	F 05	6.6
2''	2.09	1.57	3.74	3.74	2.8	1.5	0.59	0.55	0.43	0.26	1.38	0.04	1.97	F 05	8.4
2 1/2''	2.56	1.97	4.55	4.55	3.35	1.93	0.71	0.67	0.63	0.35	2.17	0.06	2.76	F 07	14
3''	3.15	2.56	4.67	4.67	3.74	2.17	0.71	0.67	0.63	0.35	2.17	0.06	2.76	F 07	16
4''	3.94	3.15	5.1	5.1	4.41	2.44	0.71	0.67	0.63	0.35	2.17	0.06	2.76	F 07	24
5''	3.94	4.92	6.99	6.99	5.83	3.35	0.89	0.87	0.67	0.43	2.76	0.06	4.02	F 10	44
6''	5.91	4.72	7.36	7.36	6.69	3.74	0.89	0.87	0.67	0.43	2.76	0.06	4.02	F 10	51
8''	7.87	6.1	8.5	8.5	8.27	4.72	1.08	1.06	0.67	0.53	3.35	0.06	4.92	F 12	88
10''	9.84	7.68	9.53	9.53	10.63	5.71	1.08	1.06	0.67	0.53	3.35	0.06	4.92	F 12	146

Dimensions in inch

Ball Sector Valve 4040

SCHUBERT SALZER

Dimensions KS2 with stem extension and hand lever

Sealing of the bearing shaft with PTFE-packing

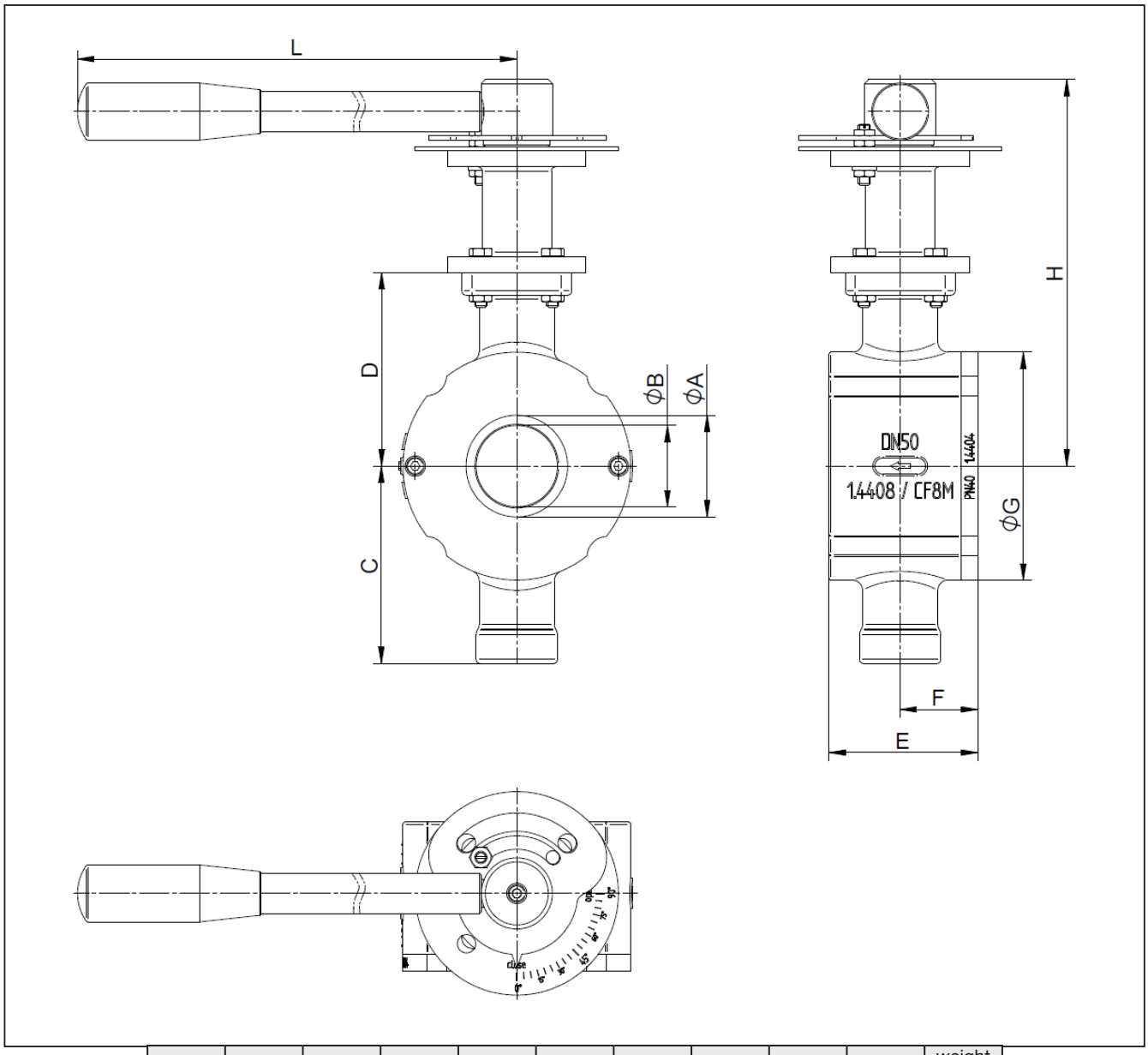

Size	A	B	C	D	E	F	G	H	L	weight (lbs)
1“	0.98	0.79	3.35	3.35	1.97	1.02	2.87	7.09	10	8.2
1 1/2“	1.61	1.26	3.62	3.62	2.28	1.22	3.7	7.36	10	10
2“	2.09	1.57	3.74	3.74	2.8	1.5	4.41	7.48	10	11.7
2 1/2“	2.56	1.97	4.57	4.57	3.35	1.93	4.41	9.09	10	0.35
3“	3.15	2.56	4.69	4.69	3.74	2.17	5.59	9.21	12.8	21.2
4“	3.94	3.15	5.12	5.12	4.41	2.44	6.85	9.65	12.8	29.6

Dimensions in inch

Ball Sector Valve 4040

SCHUBERT SALZER

Dimensions KS2 with stem extension and hand wheel gearbox

Sealing of the bearing shaft with PTFE-packing

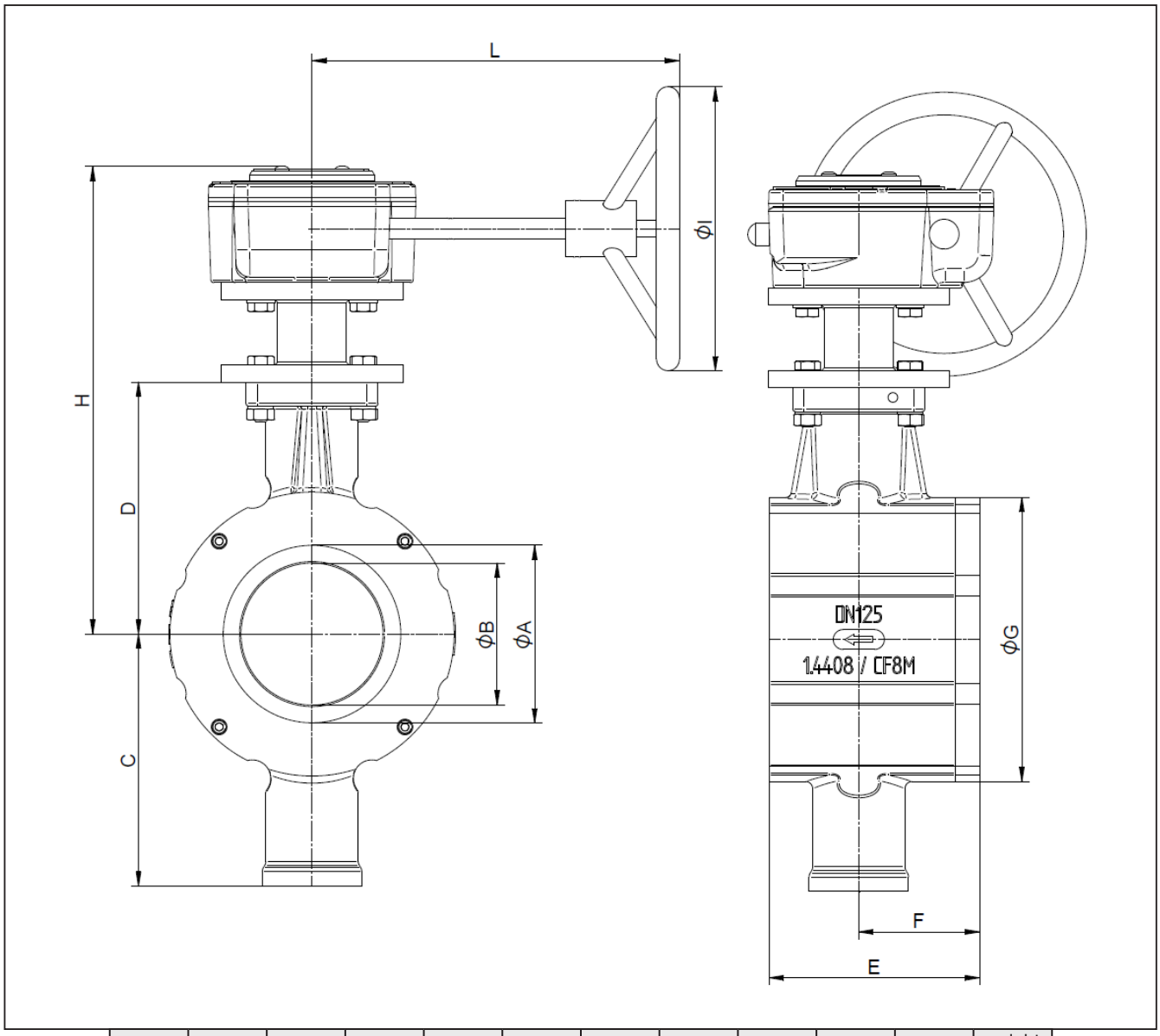

Size	A	B	C	D	E	F	G	H	I	L	weight (lbs)
5“	4.92	3.94	7.01	7.01	5.83	3.35	7.87	12.99	7.87	10.2	1.1
6“	5.91	4.72	7.36	7.36	6.69	3.74	8.66	13.35	7.87	10.2	1.22
8“	7.87	6.1	8.5	8.5	8.27	4.72	10.83	14.09	7.87	10.2	1.94
10“	9.84	7.68	9.53	9.53	10.63	5.71	13.54	15.12	7.87	10.2	2.96

Dimensions in inch

Ball Sector Valve 4040

SCHUBERT SALZER

Dimensions KS2 without actuator version with dihedron

Sealing of the bearing shaft with PTFE-packing

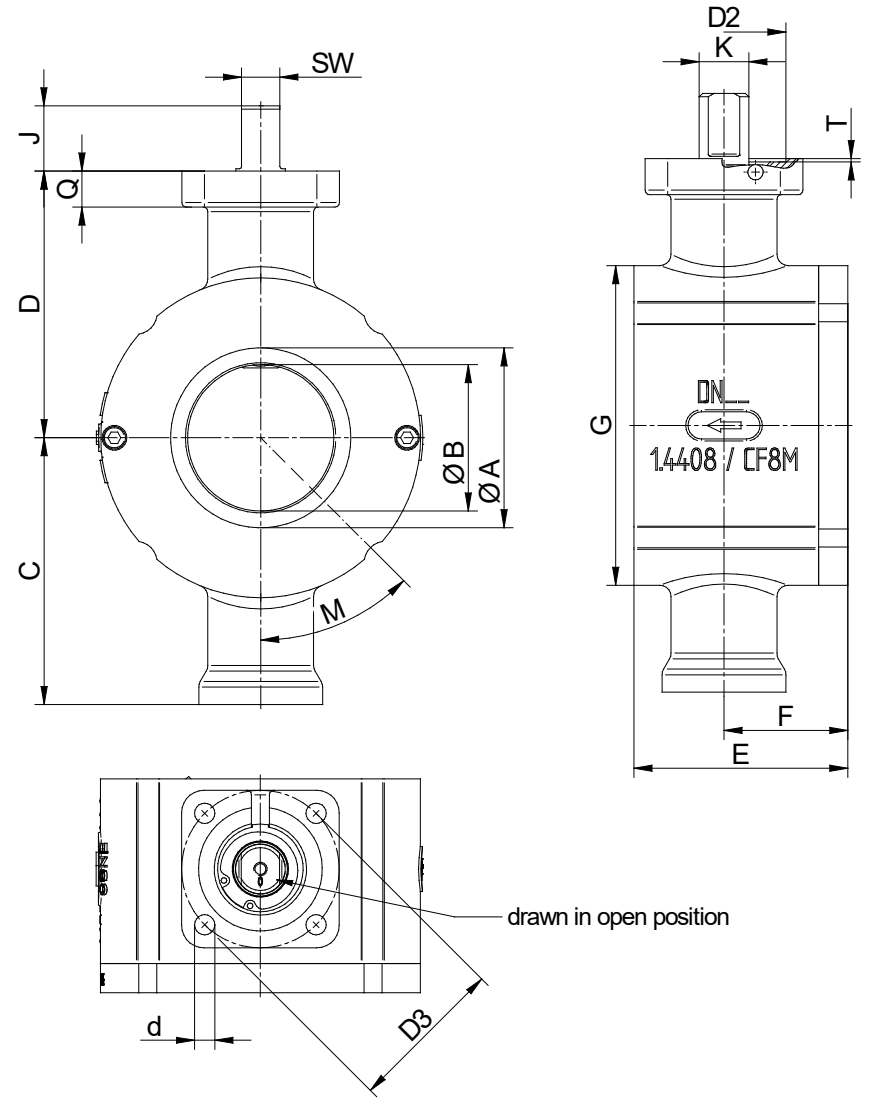

Size	A	B	C	D	E	F	J	SW	K	Q	d	D2	T	D3	DIN ISO 5211	weight [lbs]
1''	0.98	0.79	3.35	3.35	1.97	1.02	0.94	0.55	0.71	0.43	0.26	1.38	0.04	1.97	F 05	4.9
1 1/2''	1.61	1.26	3.62	3.62	2.28	1.22	0.94	0.55	0.71	0.43	0.26	1.38	0.04	1.97	F 05	6.6
2''	2.09	1.57	3.74	3.74	2.8	1.5	0.94	0.55	0.71	0.43	0.26	1.38	0.04	1.97	F 05	8.4
2 1/2''	2.56	1.97	4.55	4.55	3.35	1.93	1.14	0.67	0.87	0.63	0.35	2.17	0.06	2.76	F 07	14
3''	3.15	2.56	4.67	4.67	3.74	2.17	1.14	0.67	0.87	0.63	0.35	2.17	0.06	2.76	F 07	16
4''	3.94	3.15	5.1	5.1	4.41	2.44	1.14	0.67	0.87	0.63	0.35	2.17	0.06	2.76	F 07	24
5''	3.94	4.92	6.99	6.99	5.83	3.35	1.48	0.87	1.1	0.67	0.43	2.76	0.06	4.02	F 10	44
6''	5.91	4.72	7.36	7.36	6.69	3.74	1.48	0.87	1.1	0.67	0.43	2.76	0.06	4.02	F 10	51
8''	7.87	6.1	8.5	8.5	8.27	4.72	1.83	1.06	1.42	0.67	0.53	3.35	0.06	4.92	F 12	88
10''	9.84	7.68	9.53	9.53	10.63	5.71	1.83	1.06	1.42	0.67	0.53	3.35	0.06	4.92	F 12	146

Dimensions in inch

Dimensions KS1 12“ with AirTorque actuator

sealing of the ball sector with O-rings
(designed for a pilot pressure of 73 - 87 psi)

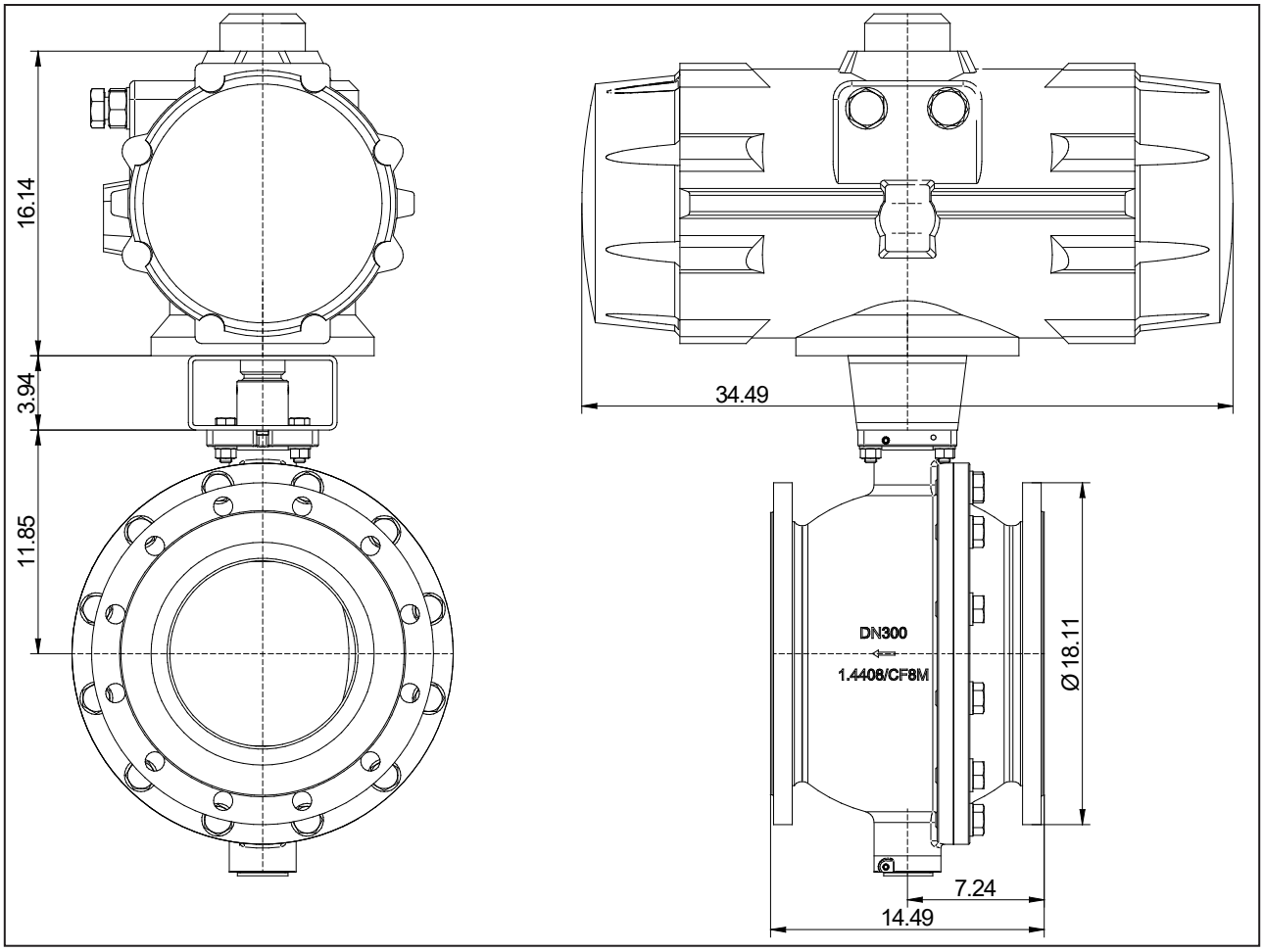

Dimension in inch

Text and pictures are not binding. We reserve the right, to alter the equipment.